ELSEVIER

Fusion Engineering and Design 39–40 (1998) 1041–1048

Fusion Engineering and Design

Tritium recovery from tritiated water with a two-stage palladium membrane reactor

S.A. Birdsell *, R.S. Willms

Los Alamos National Laboratory, Mail Stop C348, Los Alamos, NM, USA

Abstract

A process to recover tritium from tritiated water has been successfully demonstrated at the Tritium Systems Test Assembly. A 2-stage palladium membrane reactor (PMR) is capable of recovering tritium from water without generating additional waste. A substantial amount of tritiated water will be generated in the International Thermonuclear Experimental Reactor both from torus exhaust and auxiliary operations. In addition, this process can be used to recover tritium from tritiated waste water being prepared for disposal in radioactive waste repositories. A large quantity of tritiated waste water exists world wide because the predominant method of cleaning up tritiated streams is to oxidize tritium to tritiated water. A series of cold (non-tritium) water processing experiments were run in preparation for the tritiated water processing tests. Optimum operating conditions were determined with these experiments. Tritium was recovered from a container of molecular sieve loaded with 2050 g (2550 std. l) of water and 4.5 g of tritium. The maximum water processing rate for the PMR system used was determined to be 0.5 slpm. A control method was developed to automatically liberate steam from the molecular sieve and add the desired amount of CO before injection into the PMR system. The maximum decontamination factor achieved in the 1st stage ranged from 100 to 260, depending on the inlet flow rate. Performance of the 2nd stage could not be measured because the outlet tritium concentration was below the background of the ion chamber used for analysis. Although the DF could not be measured, it is known that the DF was high because no tritium was detected, except during start-up, in the tritium waste treatment system that was downstream from the PMR system. © 1998 Elsevier Science S.A. All rights reserved.

1. Introduction

A process to recover tritium from tritiated water has been successfully demonstrated at the Tritium Systems Test Assembly (TSTA) at Los Alamos National Laboratory. A 2-stage palladium membrane reactor (PMR) is capable of recovering tritium from water without generating additional waste. In addition, this process can be used to recover tritium from tritiated water waste being prepared for disposal in radioactive waste repositories. A large quantity of tritiated water waste exists world wide because the predominant method of cleaning up tritiated streams is to oxidize tritium to tritiated water. The latter can be collected with high efficiency for subsequent disposal.

Membrane reactors using various membrane materials, catalysts and geometries have been examined for diverse applications since the 1960s.

* Corresponding author.

0920-3796/98/$19.00 © 1998 Elsevier Science S.A. All rights reserved.
PII S0920-3796(98)00144-6

Such applications have been cited previously in Willms et al. [2]. None of theses applications were in the field of tritium. Also, other processes for recovering tritium from tritiated water have been investigated. Hot metal beds, electrolysis, catalytic exchange, and water-gas shift followed by permeation are discussed in Willms and Konishi [1].

Fusion fuel processing is a similar application to tritiated water processing. The International Thermonuclear Experimental Reactor (ITER) exhaust will contain tritiated impurities such as water and methane. Tritium will need to be recovered from these impurities for environmental and economic reasons. The PMR is a combined permeator and catalytic reactor. Catalysts are used to foster reactions such as water-gas shift,

$$Q_2O + CO \rightarrow Q_2 + CO_2 \quad (1)$$

and methane steam reforming,

$$CQ_4 + Q_2O \rightarrow 3Q_2 + CO \quad (2)$$

where Q represents the hydrogen isotopes H, D, and T. Due to thermodynamic limitations these reactions only proceed to partial completion. Thus, a Pd/Ag membrane, which is exclusively permeable to hydrogen isotopes, is incorporated into the reactor. By maintaining a vacuum on the permeate side of the membrane, product hydrogen isotopes are removed, enabling the reactions to proceed toward completion.

In the water-processing application, only HTO and CO are injected into the PMR and it might be expected that only reaction 1 (Eq. (1)) would be of importance. However, near the inlet of the PMR, some CQ_4 is formed by the reverse of reaction 2 (Eq. (2)). Therefore, performance of the PMR system at water-processing conditions is similar to that of fusion-fuel processing conditions in which CQ_4 is also present.

Results of a single-stage palladium-membrane reactor have been reported in previous papers. Willms et al. [2] processed simulated fusion fuels with a PMR, but these early experiments contained no tritium. Willms and Birdsell [3] and Birdsell and Willms [4] reported on tritium experiments with a single-stage PMR system and Birdsell and Willms [5] reported on tritium experiments with a two-stage PMR system. The experiments were conducted at ITER relevant conditions and were found to have a 1st stage decontamination factor (DF = inlet hydrogen isotopes/retentate hydrogen isotopes) in the 150–400 range for the 1st stage alone and up to 3×10^6 for the 2nd stage alone.

The present study was done to demonstrate that tritium can be recovered from tritiated water. Initially cold experiments were run to determine the effect of inlet rate, temperature, and the optimum CO injection. Tritiated water was then processed at these conditions. To close the loop of tritium recovery, tritium must be adequately separated from hydrogen and deuterium so these non-radioactive components can be stacked to the environment. Isotope separation experiments were run in the cryogenic distillation system at TSTA to demonstrate this separation. However, the isotope separation work is beyond the scope of this paper and will not be discussed here.

2. Cold testing

2.1. Experimental apparatus

Fig. 1 is a simplified schematic of the PMR cold test bench. Feed gases are injected into the 1st stage using Brooks 5850EM mass flow controllers. Water injection is made by flowing a mixture of H_2 and O_2 over a Pt catalyst. CO is mixed with the H_2O before injection into the 1st stage. The ~ 1 mb vacuum on the permeate side of the 1st stage is generated by a Normetex 15 scroll pump backed by a Metal Bellows 601 pump. In the 2nd stage, the Varian V250 pumping system is capable of about a 1×10^{-6} mb vacuum with the hydrogen rates resulting from these experiments. Two MTI model M200 gas chromatographs are used to measure the performance of the PMRs. The GC at the outlet of the 2nd stage is setup in the 'high sensitivity' mode so that a minimum of approximately 5 ppm CH_4 and 0.3 ppm H_2 can be measured. The GC at the outlet of the 1st stage is setup in the 'medium sensitivity' mode so that a minimum of approximately 0.01% CH_4 and H_2 can be measured. Endress and Hauser model 2850 humidity probes are used to

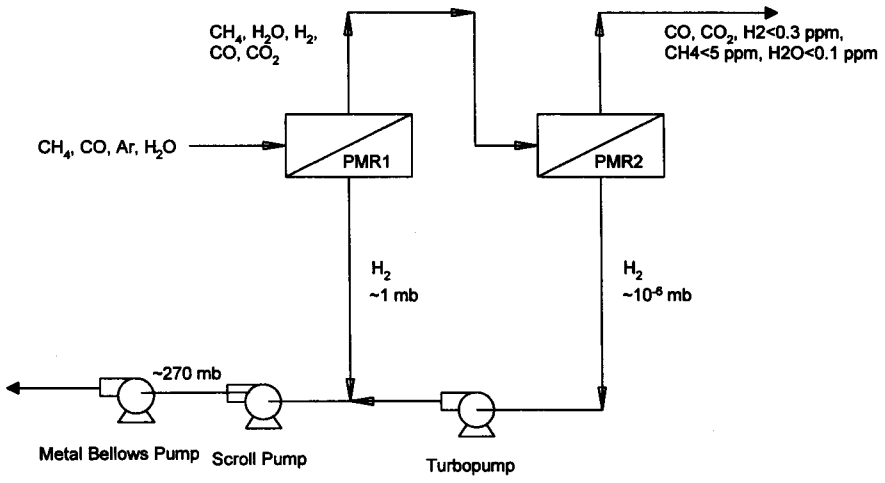

Fig. 1. Schematic of cold test bench.

measure the H_2O concentrations at the outlet of each stage. The probes were calibrated from −80°C to 20°C dew point and have an accuracy of ±1°C dew point.

Fig. 2 shows a schematic drawing of the 1st stage. This PMR has a Pd/Ag tube which is 61.0 cm long, 0.635 cm in outer diameter, and has a wall thickness of 0.0178 cm. The stainless steel shell is 66.0 cm long, 2.54 cm in outer diameter, and has a wall thickness of 0.165 cm. The annular space around the Pd/Ag tube is filled with 297 g of Pt/α-Al_2O_3 catalyst (Engelhard A-16825). A vacuum is applied to the inside of the Pd/Ag tube with the pumping system. The PMR is oriented vertically in a tube furnace with the inlet at the top.

Fig. 3 is a schematic drawing of the 2nd stage. One of the 0.635 cm outside diameter tubes is a Pd/Ag tube identical to that in the 1st stage, while the other tube is a stainless steel blank. The Pd/Ag tube is filled with 10.3 g of Pt/α-Al_2O_3 catalyst. The vacuum is applied to the shell side in the 2nd stage because the large 9.83 cm inner diameter is required so that high vacuums of $\sim 10^{-6}$ mb can be uniformly developed down the length of the pipe. Also, a relatively smaller quantity of catalyst is required in the 2nd stage and this quantity can fit on the inside of the Pd/Ag tube. The PMR is oriented horizontally in a tube furnace.

2.2. First stage results

Non-tritium experiments were run on the cold test bench in preparation for the tritium water processing tests. Operating conditions were varied so that optimal operating conditions could be determined before tritium tests were run. H_2O and CO were injected into the system and the hydrogen recovery was measured as a function of temperature, inlet flow rate, and inlet CO-to-H_2O ratio (CO:H_2O).

At 530°C, measurable fractions of CH_4 are formed in the reactor from the reverse of reaction 2 (Eq. (2)). To avoid CH_4 formation, the PMR was tested at 300 and 400°C, where only small quantities of CH_4 formation occurs to determine if better performance could be achieved. Although little CH_4 was generated at the lower temperatures, the overall performance of the PMR system suffered due to lower reaction and permeation rates. As can be seen from Fig. 4, the PMR has poor performance below about 450°C, and performance improves with increasing temperature above 450°C. The figure shows data up to 600°C, but as will be discussed below, long-term operation of PMRs have not been demonstrated above 530°C.

Experiments were run at inlet H_2O rates of 29, 50, 75, 100, 125, and 150 sccm at 530°C. Data were collected at CO:H_2O ratios of 1.00, 1.10,

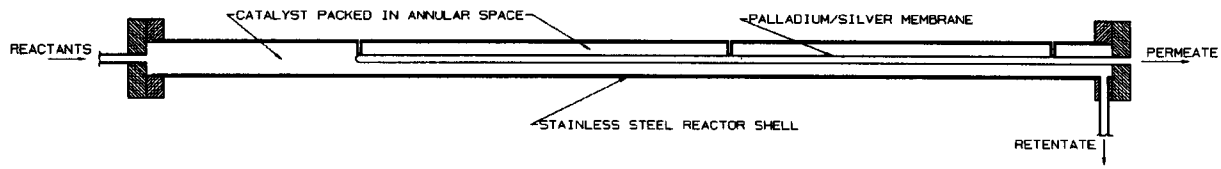

Fig. 2. Schematic of 1st stage PMR.

1.25, and 1.40 for each of the H_2O inlet rates. Figs. 5 and 6 show the outlet CH_4 and H_2O concentrations as a function of inlet rate and $CO:H_2O$, respectively. Increasing the injection rate causes both the CH_4 and H_2O outlet concentrations to increase. Increasing the $CO:H_2O$ has opposite effects on the CH_4 and H_2O outlet concentrations. The CH4 concentration increases with increasing $CO:H_2O$, while the H_2O concentration decreases with increasing $CO:H_2O$.

Fig. 7 shows the H_2 concentration at the outlet of the 1st stage. These curves are relatively flat when compared to Figs. 5 and 6 probably because the H_2 concentration in the retentate is controlled by the vacuum pressure on the permeate side of the membrane. Sievert's law

$$Q_{\text{perm}} \propto \sqrt{P_{\text{H}}} - \sqrt{P_{\text{L}}} \tag{3}$$

where Q_{perm} is the permeate flow rate and the subscripts H and L represent the high and low pressure sides of the membrane, indicates that the permeate rate should be independent of the $CO:H_2O$, since changing this ratio only slightly changes $\sqrt{P_{\text{H}}}$ and has no significant effect on $\sqrt{P_{\text{L}}}$. At the lowest H_2O inlet rate of 29 sccm, the H_2 concentration is nearly in equilibrium with P_{L}, however, the Pd/Ag membrane area is not large enough for equilibrium to be reached as the H_2O inlet rate is increased. It is possible that this permeation rate is slower than the chemical reaction rates and dominates the performance of the PMR. That is, H_2 concentration is controlled by the permeation rate and this H_2 concentration is in chemical equilibrium with the other components in the retentate stream. Birdsell and Willms [3] analyzed PMR data with a numerical model and determined that the species within the retentate stream were nearly in thermodynamic equilibrium.

The data of Figs. 5–7 are shown on a single plot in the form of DF on Fig. 8. The optimum $CO:H_2O$ was found to be in the range of 1.1–1.25 at 530°C. These curves are relatively flat near the

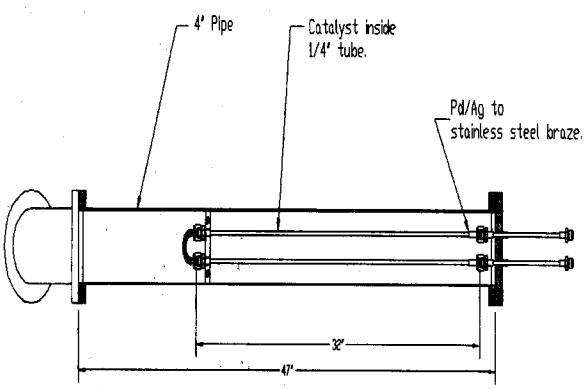

Fig. 3. Schematic of 2nd stage PMR.

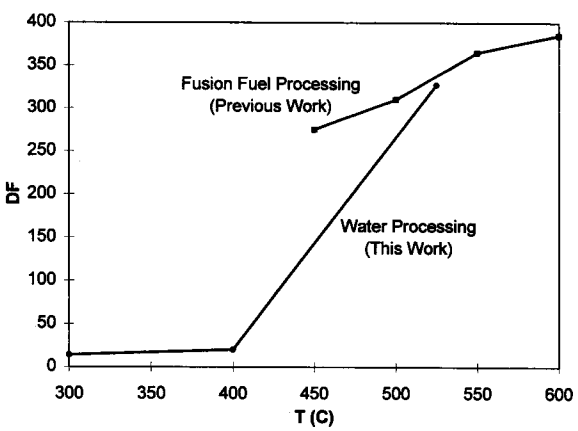

Fig. 4. Decontamination factor versus temperature for water processing and fusion fuel processing conditions. Inlet rate is 29 sccm H_2O and 41 sccm CO for water processing. Fusion fuel processing results were done in the same PMR with inlet flows of 25 sccm H_2O, 20 sccm CH_4, and 22 sccm Ar.

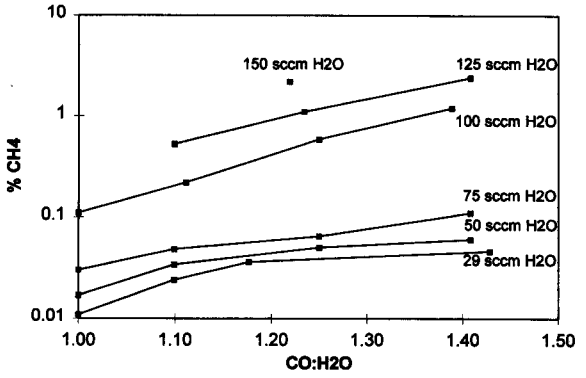

Fig. 5. Methane concentration at the outlet of the 1st stage (530°C).

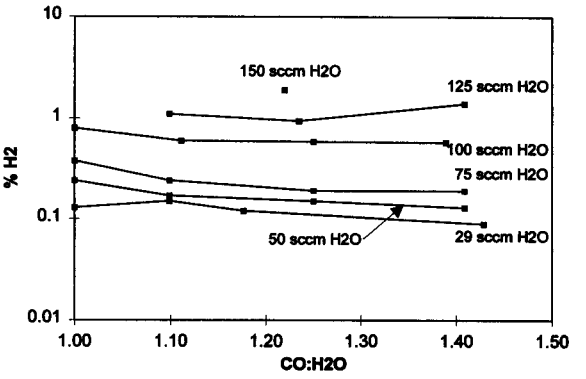

Fig. 7. Hydrogen concentration at the outlet of the 1st stage (530°C).

optimum resulting in a wide range of $CO:H_2O$ where good performance is obtained and, thus, tight control of the $CO:H_2O$ is unnecessary. There are not adequate data to determine the exact optimum value, nor to determine if the value is dependent on the inlet H_2O rate. In the future, experiments will be performed to determine the optimum O_2 and CO injections for any mixture of CH_4 and H_2O that are fed to the PMR.

2.3. Second stage results

Second stage decontamination factors in excess of 1000 were seen, but the exact number could not be determined due to analysis limitations. In nearly all of the runs, the compositions of all three hydrogen-bearing species were below detection limits ($H_2 < 0.3$ ppm, $CH_4 < 5$ ppm, $H_2O <$ -80°C dew point). Therefore, overall (1st and 2nd stage) decontamination factors could only be determined to be $> 1 \times 10^5$.

2.4. Long-term operation and reliability

These water processing experiments were conducted over a period of 30 days of around-the-clock operation. In addition, fusion-fuel processing experiments have been conducted with the same PMR system for over 100 days, including a single 61-day test. During the operating history of the PMR system, many startups and shutdowns have occurred. No failures or loss of performance have been experienced.

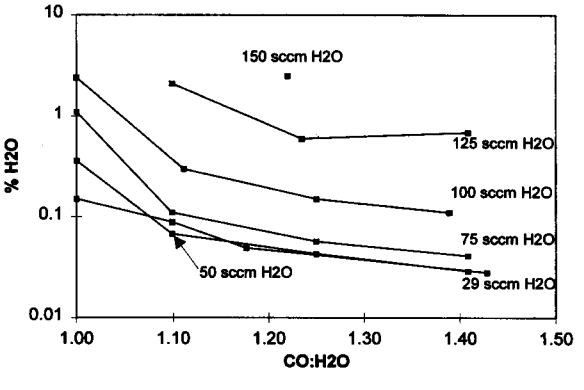

Fig. 6. Water concentration at the outlet of the 1st stage (530°C).

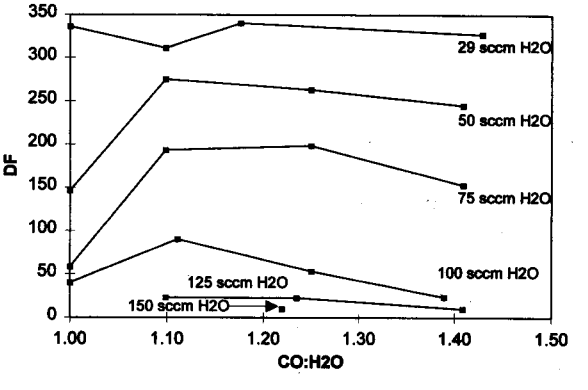

Fig. 8. Decontamination factor versus inlet CO-to-H_2O ratio (530°C).

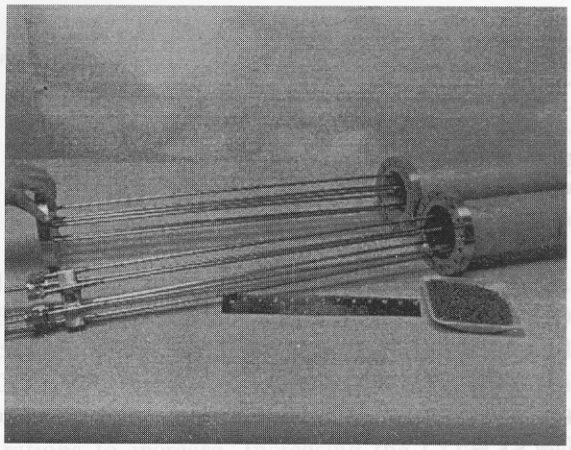

Fig. 9. Photograph of the 1st stage (background) and 2nd stage (foreground). Catalyst is not yet loaded around the Pd/Ag tubes in the 1st stage.

3. Tritiated water processing with the PMR system

3.1. Experimental apparatus

In addition to the cold test bench, a 2-stage tritium compatible PMR system has been constructed within a glovebox. The glovebox system is similar to the cold test bench (Fig. 1), but has been scaled up. Fig. 9 is a photograph of the 1st and 2nd stages. The 1st stage has an outer diameter of 10.2 cm with a 0.165 cm wall thickness and has 7223 g of Pt/α-Al_2O_3 catalyst loaded around six Pd/Ag tubes. One of the Pd/Ag tubes is located on the centerline and the remaining five are arranged in a 5.4-cm circle. One end of each of the Pd/Ag tubes is plugged, while the other end is attached to a flange so the inside of the tubes can be pumped. The 2nd stage design is similar to that of the 2nd stage on the cold test bench, but six Pd/Ag tubes are arranged in the 9.83 cm inside diameter pipe rather than one Pd/Ag tube and one stainless steel blank. Sixty-one g of Pt/α-Al_2O_3 catalyst are loaded inside the Pd/Ag tubes.

Both PMRs are similar to those used in the cold tests, but are scaled up by a factor of 6 in the surface area of Pd/Ag tubing. The gas chromatograph and humidity probes are also the same as in the cold test bench. Two Overhoff Technology ion chambers were installed in the process. The ion chamber at the outlet of the 1st stage has a range of 1×10^{-1}–2×10^{6} Ci m^3, while the one at the outlet to the 2nd stage has a range of 3.4×10^{0}–2×10^{4} Ci m^3. The inlet and outlet tubing to the PMRs were heat traced so that water condensation would not occur. Both stages were oriented horizontally in the glovebox and heated with Thermcraft, Inc. clamshell heaters.

Seven tritiated water processing tests were run in the period from June–September 1996 (Table 1). These were 1-day tests resulting in a total of 47 hours of operation. The 1st test was run at a low total inlet rate of 0.29 slpm (0.13 slpm HTO) in order to check out the system. The next four tests were run at a total inlet rate of 1.11 slpm (0.50 slpm HTO).

This is roughly the maximum inlet rate, based on tests from the cold test bench, without causing a sharp decline in the decontamination factor. The inlet rate was increased above 0.5 slpm HTO for short periods of time and the 1st stage DF dropped significantly, thus confirming that the maximum inlet rate for a PMR system of this size is about 0.5 slpm HTO.

Up to 4 h were required for start up of each test due to the time required to heat the molecular sieve container to a temperature at which it would produce the desired flow of HTO. The temperature was increased slowly in the first few experiments to learn the heat-up versus HTO flow behavior. In later tests, the heat-up time was reduced to about 1 h.

To operate properly, the PMR must be fed CO and steam in a proper ratio and at a controlled rate. By heating, a steady rate of steam was produced from the molecular sieve and a method for accurately adding the desired quantity of CO to the HTO stream was demonstrated (Fig. 10). The technique consists of manually setting power to the molecular-sieve-bed heater to roughly set the rate of steam generation. Downstream from the molecular sieve bed, a heated mass flow controller from Unit Instruments measures the combined CO and steam flow rates. The total CO and steam flow rate is sent to a ratio controller which determines the CO flow rate and sends this signal to the CO flow controller. The control scheme has

Table 1
Recovery and processing time during the water processing tests

Run	Date	Nominal Q_2O injection rate (slpm)	Processing time (h)	Q_2 recovery (std. l)	T_2 recovery (Ci)
1	6/12/96	0.13	6	28.9	490
2	6/13/96	0.50	8	134	2280
3	7/9/96	0.50	8	91.5	1550
4	7/10/96	0.50	8	158	2680
5	7/11/96	0.50	8	161	2730
6	8/12/96	0.13	4	31.2	530
7	9/27/96	0.13	5	90.3	1530
Total			47	694	11 800 (1.2 g)

been demonstrated to be accurate, reliable and easy to operate.

Steady state was not achieved within the PMR system during any of these tests due to the relatively short run times. The gas compositions measured by GC and the activity measured by the ion chambers were still transient at the end of the tests. A previous experiment indicated that about 30 h are required to achieve steady state. The 1st stage initially had a decontamination factor (DF) of about 50 for each of the tests and the DF steadily increased throughout the tests. By the end of the tests, the DF had reached the 100–260 range and was still increasing. The final DF depended on the inlet rate and the length of time the test had been run. This performance is consistent with what was expected from parametric testing on the cold test bench.

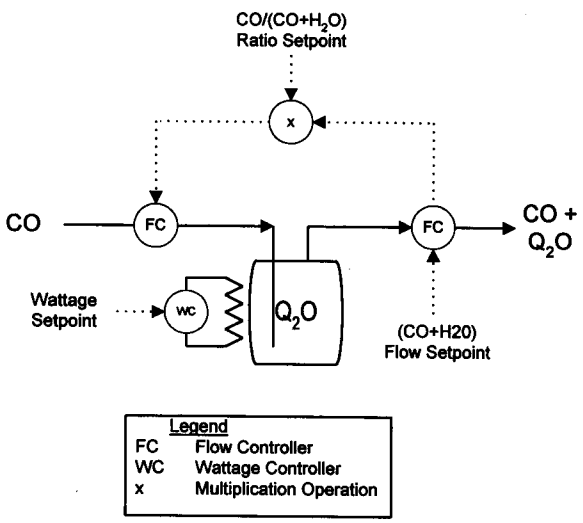

Fig. 10. Control scheme for producing water from a molecular sieve bed and injecting the appropriate amount of CO.

Performance of the 2nd stage could not be measured because the outlet tritium concentration was below the background of the ion chamber at the outlet of the 2nd stage. Although the DF could not be measured, it is known that the DF was high because, except for a brief period at the beginning of each run, no tritium was detected in the tritium waste treatment system that was downstream from the PMR system. The tritium breakthrough at start-up was due to a slug of gas breaking through the 2nd stage. A startup method is being developed to avoid this situation.

4. Conclusions

A process to recover tritium from tritiated water has been successfully demonstrated at TSTA. A total of 694 std. l of tritiated steam have been processed at high decontamination factors resulting in recovery of 1.2 g of tritium.

Thirty days of round-the-clock testing were completed on the cold PMR test bench in preparation for tritium tests. Decontamination factors $> 10^5$ were routinely observed. The optimum CO injection ratio was determined from these tests. The cold test bench now has about 130 days of operation without failure or decrease in performance.

A system was developed to control the production of tritiated steam from molecular sieve beds and add the proper amount of CO. The control system is accurate, reliable and easy to operate.

References

[1] R.S. Willms, S. Konishi, Fuel cleanup systems for fusion fuel processing, Fusion Eng. Des. 18 (1991) 53–60.

[2] R.S. Willms, R. Wilhelm, S. Konishi, Performance of a palladium membrane reactor using an Ni catalyst for fusion fuel impurities processing, Fusion Eng. Des. 28 (1995) 397–405.

[3] R.S. Willms, S.A. Birdsell, Palladium membrane reactor development at the tritium systems test assembly, Fusion Technol. 281 (3/1) (1995) 772–777.

[4] S.A. Birdsell, R.S. Willms, Modeling and data analysis of a palladium membrane reactor for tritiated impurities cleanup, Fusion Tech. 28 (3/1) (1995) 530–537.

[5] S.A. Birdsell, R.S. Willms, Ultra-high tritium decontamination of simulated fusion fuel exhaust using a 2-stage palladium membrane reactor. Fusion Technol. (accepted for publication).